UN500D1 Machine Dimensions

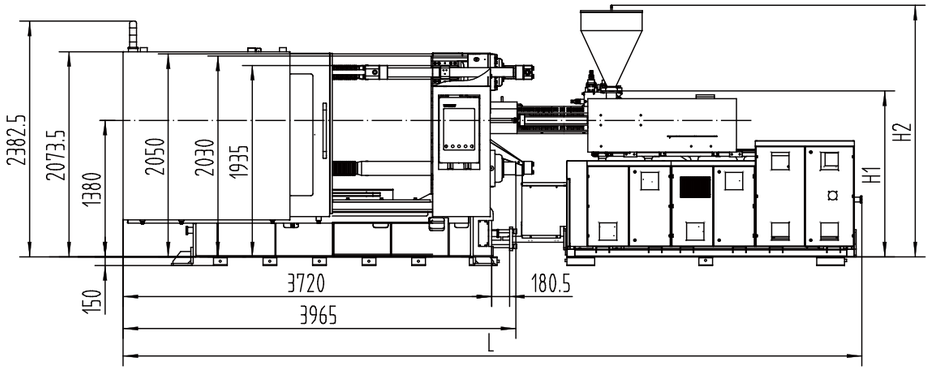

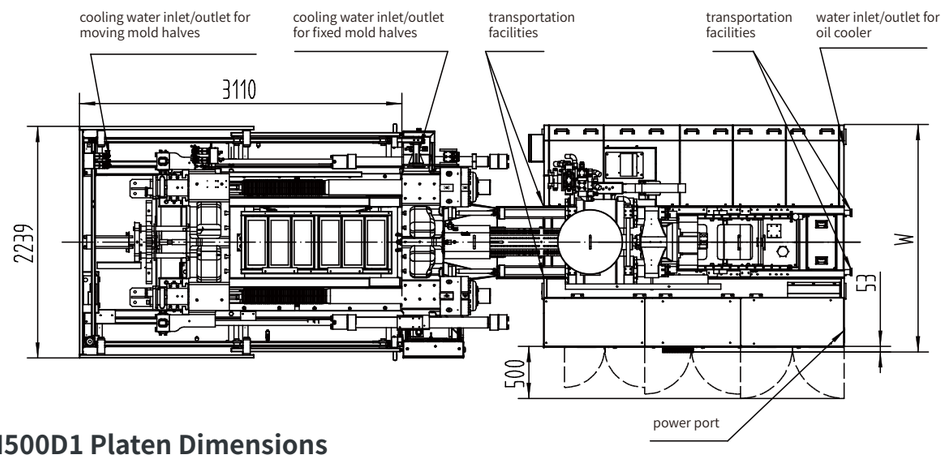

UN500D1 Platen Dimensions

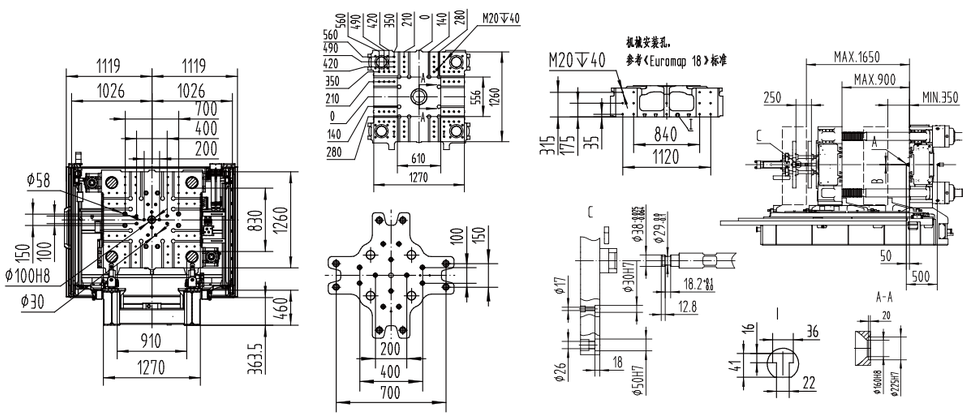

Model	A	B	L	H1	H2	W	Main power cord size	Full-load current	Bearing capacity of foundation	Mold cooling water ports	Cooling water flow (mold excluded)	Cooling water pressure	Compressed air pressure
	mm	mm	mm	mm	mm	mm	mm^2	A	t/m^2	n×L/min	L/min	bar	bar
UN500D1-IU1885	SR10	Φ3.5	7456	1617	2360	2198	70	161.46	7.5	(8+8)×11	150	3~4	5~6
UN500D1-IU2695	SR15	Φ4	7456	1677	2542	2198	70	176.74	7.5	(8+8)×11	150	3~4	5~6
UN500D1-IU3330	SR15	Φ4	7456	1550	2710	2198	70	186.89	7.5	(8+8)×11	150	3~4	5~6
UN500D1-IU4800	SR15	Φ4.5	8580	1565	2430	2333	70	215.49	7.5	(8+8)×11	150	3~4	5~6

UN500D1 Specifications

Injection Unit													
Model	**IU1885**			**IU2695**			**IU3330**			**IU4800**			
Screw diameter (mm)	60	68	76	68	76	84	76	84	92	84	92	100	108
Shot volume (cm^3)	834	1071	1338	1198	1497	1829	1678	2050	2460	2217	2659	3142	3664
Shot weight (g)	767	986	1231	1103	1377	1683	1544	1886	2263	2039	2446	2890	3371
Injection pressure (MPa)	226	176	141	225	180	147	199	162	136	218	181	154	134
L/D ratio	22.6	20	20	22.3	20	20	22.1	20	20	21.9	20	21.6	20
Injection rate (cm^3/s)	322	414	517	383	478	584	430	526	632	516	619	730	853
Max.injection speed (mm/s)	114			105			95			93			
Screw stroke (mm)	295			330			370			400			
Max.screw speed (r/min)	250			184			147			154			
Barrel heating zone (PCS)	5			6			6			6			
Clamping Unit													
Clamping force (kN)	5000												
Opening force (kN)	390												
Platen size (mm)	1270X1260												
Space between tie bars (mm)	910X830												
Max. mold thickness (mm)	900												
Min. mold thickness (mm)	350												
Opening stroke (mm)	1300/750												
Max. daylight (mm)	1650												
Ejector force (KN)	110												
Ejector stroke (mm)	250												
Ejector number (PCS)	21												
Power Unit													
System pressure (MPa)	17.5/30			17.5/30			17.5/30			17.5/30			
Pump motor (kW)	55.6+5.5			60+5.5			60+5.5			66+5.5			
Total power (kW)	83.3	83.3	85.7	91.9	91.9	96.4	98.6	98.6	101.7	108.6	108.6	118.5	118.5
Heater power (kW)	22.2	22.2	24.6	26.4	26.4	30.9	33.1	33.1	36.2	37.14	37.14	47	47
General													
Oil tank capacity (L)	650			750			750			1000			
Machine dimensions (m)	7.5X2.3X2.4			7.5X2.3X2.6			7.5X2.3X2.7			8.6X2.4X2.5			
Max. mold weight (T)	8			8			8			8			

1. Opening force refers to mold opening force generated during high-pressure mold open.
2. In the case of opening stroke, data before the slash refer to mold opening stroke with minimum mold height; data after the slash refer to opening stroke with maximum mold height.
3. Mold-bearing capacity of the movable platen is 2/3 of total mold weight.
4. The shot weight is calculated by GPPS and it is 0.92 times of the theoretical shot volume.
5. Three kinds of screws are available for each model and the medium one is standard on the machine.
6. The injection unit data are in international units and calculated as follows: theoretical shot volume [cm^3] × injection pressure (MPa)/100
7. The green figures are standard specifications of clamping unit and injection unit.
8. Because of constant technical improvement, the machine specifications are subject to change without notice.

UN700D1 Machine Dimensions

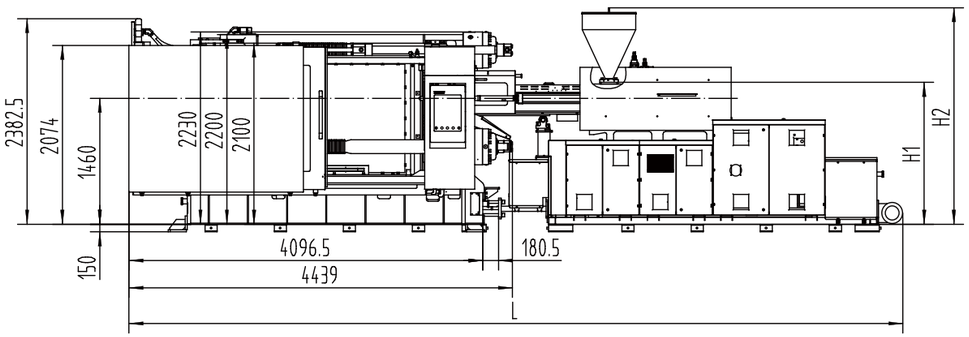

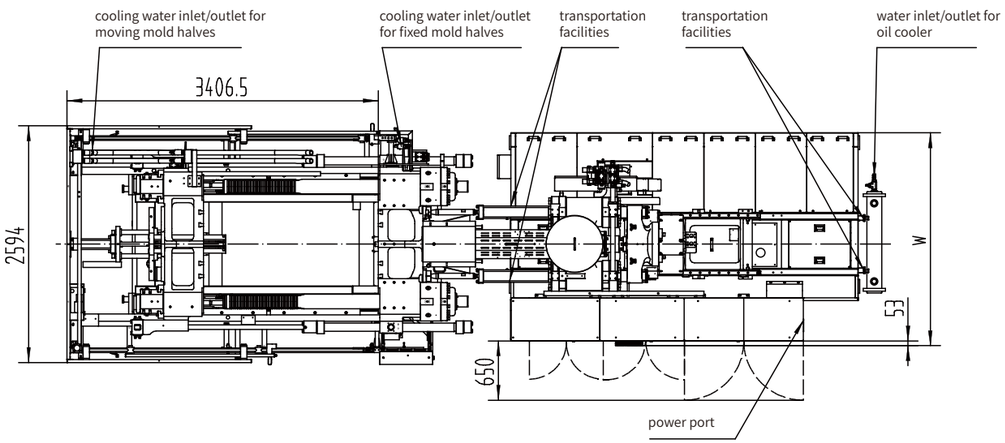

UN700D1 Platen Dimensions

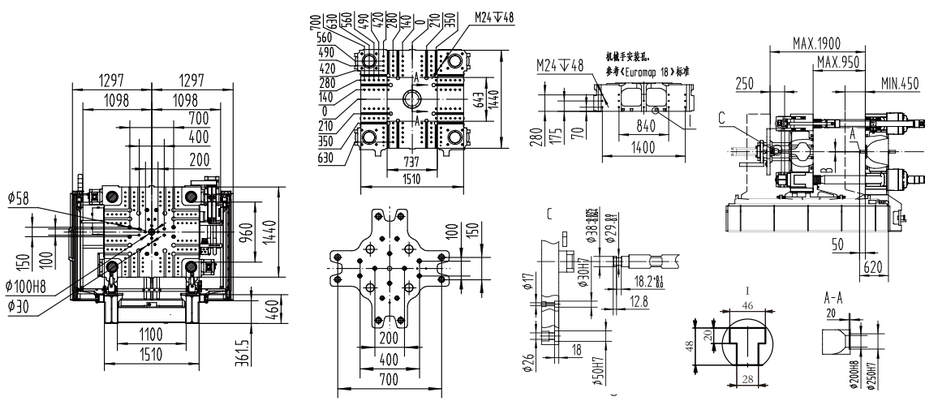

Model	A	B	L	H1	H2	W	Main power cord size	Full-load current	Bearing capacity of foundation	Mold cooling water ports	Cooling water flow (mold excluded)	Cooling water pressure	Compressed air pressure
	mm	mm	mm	mm	mm	mm	mm^2	A	t/m^2	n×L/min	L/min	bar	bar
UN700D1-IU2695	SR15	Φ4	7833	1757	2622	2198	70	176.74	7.5	(8+8)×11	150	3~4	5~6
UN700D1-IU3330	SR15	Φ4	7833	1757	2630	2198	70	186.89	7.5	(8+8)×11	150	3~4	5~6
UN700D1-IU4800	SR15	Φ4.5	8957	1645	2510	2333	70	215.49	7.5	(8+8)×11	150	3~4	5~6
UN700D1-IU6800	SR15	Φ4.5	8957	1645	2510	2711	95	259.84	7.5	(8+8)×11	150	3~4	5~6

UN700D1 Specifications

Injection Unit														
Model	**IU2695**			**IU3330**			**IU4800**				**IU6800**			
Screw diameter (mm)	68	76	84	76	84	92	84	92	100	108	92	100	108	116
Shot volume (cm^3)	1198	1497	1829	1678	2050	2460	2217	2659	3142	3664	3191	3770	4397	5073
Shot weight (g)	1103	1377	1683	1544	1886	2263	2039	2446	2890	3371	2936	3468	4045	4667
Injection pressure (MPa)	225	180	147	199	162	136	218	181	154	134	213	180	154	134
L/D ratio	22.3	20	20	22.1	20	20	21.9	20	21.6	20	21.7	22	21.5	20
Injection rate (cm^3/s)	383	478	584	430	526	632	516	619	730	853	615	726	847	980
Max.injection speed (mm/s)	105			95			93				92.5			
Screw stroke (mm)	330			370			400				480			
Max.screw speed (r/min)	184			147			154				145			
Barrel heating zone (PCS)	6			6			6				7			

Clamping Unit		
	D1	**WD1**
Clamping force (kN)	7000	7000
Opening force (kN)	500	500
Platen size (mm)	1510X1440	1560X1520
Space between tie bars (mm)	1100X960	1200X1020
Max. mold thickness (mm)	950	1100
Min. mold thickness (mm)	450	500
Opening stroke (mm)	1450/950	1650/1050
Max. daylight (mm)	1900	2150
Ejector force (KN)	110	220
Ejector stroke (mm)	250	320
Ejector number (PCS)	21	17

Power unit														
System pressure (MPa)	17.5/30			17.5/30			17.5/30				17.5/30			
Pump motor (kW)	60+5.5			60+5.5			66+5.5				89+7.5			
Total power (kW)	91.9	91.9	96.4	98.6	98.6	101.7	108.6	108.6	118.5	118.5	143.5	143.5	153.1	153.1
Heater power (kW)	26.4	26.4	30.9	33.1	33.1	36.2	37.14	37.14	47	47	47	47	56.6	56.6

General					
Oil tank capacity (L)		750	750	1000	1150
Machine dimensions (m)	D1	7.9×2.6×2.7	7.9×2.6×2.7	9×2.6×2.6	9×2.7×2.6
	WD1	9.4×3.3×2.9	9.4×3.3×2.9	9.4×3.3×2.9	9.5×3.3×2.9
Max. mold weight (T)	D1	11	11	11	11
	WD1	13	13	13	13

1. Opening force refers to mold opening force generated during high-pressure mold open.
2. In the case of opening stroke, data before the slash refer to mold opening stroke with minimum mold height; data after the slash refer to opening stroke with maximum mold height.
3. Mold-bearing capacity of the movable platen is 2/3 of total mold weight.
4. The shot weight is calculated by GPPS and it is 0.92 times of the theoretical shot volume.
5. Three kinds of screws are available for each model and the medium one is standard on the machine.
6. The injection unit data are in international units and calculated as follows: theoretical shot volume [cm^3] × injection pressure (MPa)/100
7. The green figures are standard specifications of clamping unit and injection unit.
8. Because of constant technical improvement, the machine specifications are subject to change without notice.

UN900D1 Machine Dimensions

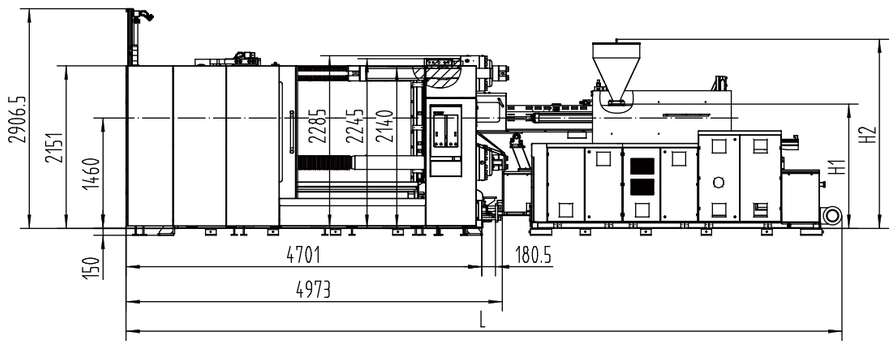

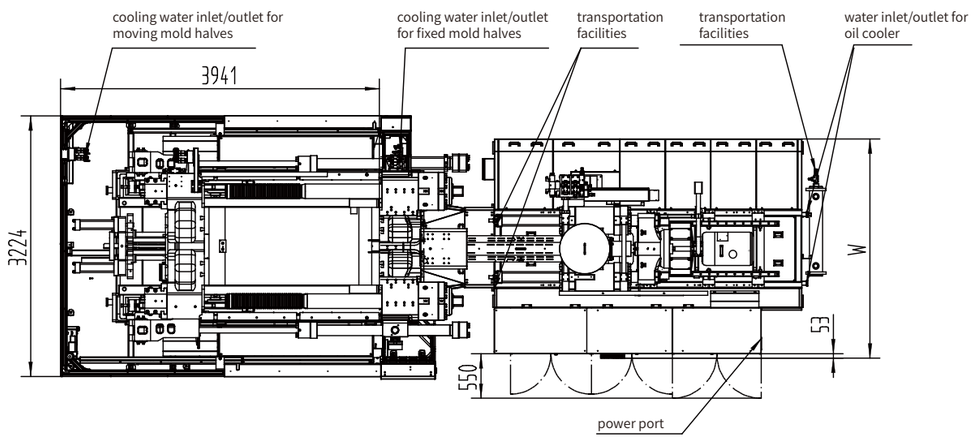

UN900D1 Platen Dimensions

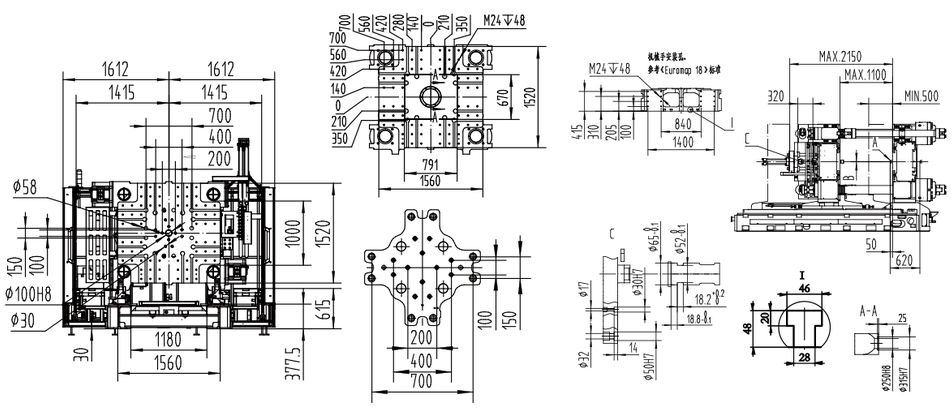

Model	A	B	L	H1	H2	W	Main power cord size	Full-load current	Bearing capacity of foundation	Mold cooling water ports	Cooling water flow (mold excluded)	Cooling water pressure	Compressed air pressure
	mm	mm	mm	mm	mm	mm	mm²	A	t/m²	n×L/min	L/min	bar	bar
UN900D1-IU4800	SR15	Φ4.5	9461	1645	2510	2333	70	215.49	7.5	(8+8)×11	150	3~4	5~6
UN900D1-IU6800	SR15	Φ4.5	9461	1645	2510	2711	95	259.84	7.5	(8+8)×11	150	3~4	5~6
UN900D1-IU9000	SR15	Φ4.5	9591	2206	2863	2906	95	316.71	7.5	(8+8)×11	150	3~4	5~6

UN900D1 Specifications

Injection Unit												
Model	**IU4800**				**IU6800**				**IU9000**			
Screw diameter (mm)	84	92	100	108	92	100	108	116	100	108	116	125
Shot volume (cm³)	2217	2659	3142	3664	3191	3770	4397	5073	4320	5038	5813	6748
Shot weight (g)	2039	2446	2890	3371	2936	3468	4045	4667	3974	4636	5348	6208
Injection pressure (MPa)	218	181	154	134	213	180	154	134	209	179	155	134
L/D ratio	21.9	20	21.6	20	21.7	22	21.5	20	21.6	20	21.6	20
Injection rate (cm³/s)	516	619	730	853	615	726	847	980	766	894	1031	1197
Max.injection speed (mm/s)	93				92.5				97.6			
Screw stroke (mm)	400				480				550			
Max.screw speed (r/min)	154				145				128			
Barrel heating zone (PCS)	6				7				7			

Clamping Unit		
	D1	**WD1**
Clamping force (kN)	9000	9000
Opening force (kN)	640	640
Platen size (mm)	1560X1520	1850X1800
Space between tie bars (mm)	1180X1000	1460X1210
Max. mold thickness (mm)	1100	1200
Min. mold thickness (mm)	500	600
Opening stroke (mm)	1650/1050	2200/1600
Max. daylight (mm)	2150	2800
Ejector force (KN)	220	274
Ejector stroke (mm)	320	360
Ejector number (PCS)	21	25

Power unit												
System pressure (MPa)	17.5/30				17.5/30				17.5/30			
Pump motor (kW)	66+7.5				89+7.5				110+7.5			
Total power (kW)	110.6	110.6	120.5	120.5	143.5	143.5	153.1	153.1	169.3	169.3	178.4	178.4
Heater power (kW)	37.14	37.14	47	47	47	47	56.6	56.6	51.76	51.76	60.9	60.9

General				
Oil tank capacity (L)		1000	1150	1400
Machine dimensions (m)	D1	9.5×3.3×2.9	9.5×3.3×2.9	9.6×3.3×2.9
	WD1	10.2×3.5×3.3	10.3×3.5×3.3	10.5×3.5×3.3
Max. mold weight (T)	D1	13	13	13
	WD1	21	21	21

1. Opening force refers to mold opening force generated during high-pressure mold open.
2. In the case of opening stroke, data before the slash refer to mold opening stroke with minimum mold height; data after the slash refer to opening stroke with maximum mold height.
3. Mold-bearing capacity of the movable platen is 2/3 of total mold weight.
4. The shot weight is calculated by GPPS and it is 0.92 times of the theoretical shot volume.
5. Three kinds of screws are available for each model and the medium one is standard on the machine.
6. The injection unit data are in international units and calculated as follows: theoretical shot volume [cm³] × injection pressure (MPa)/100
7. The green figures are standard specifications of clamping unit and injection unit.
8. Because of constant technical improvement, the machine specifications are subject to change without notice.

UN1100D1 Machine Dimensions

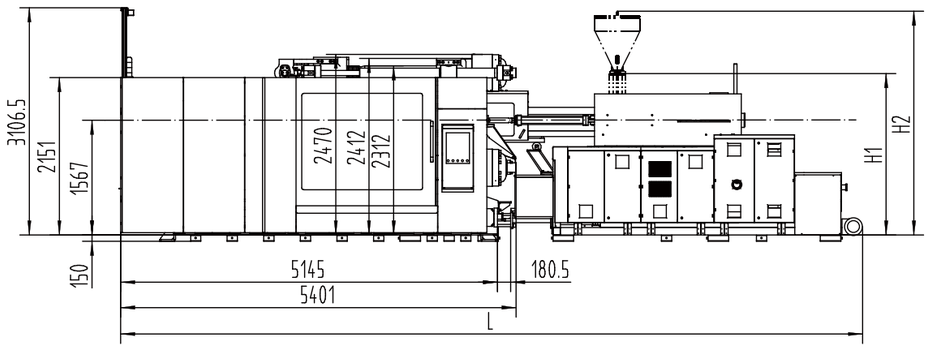

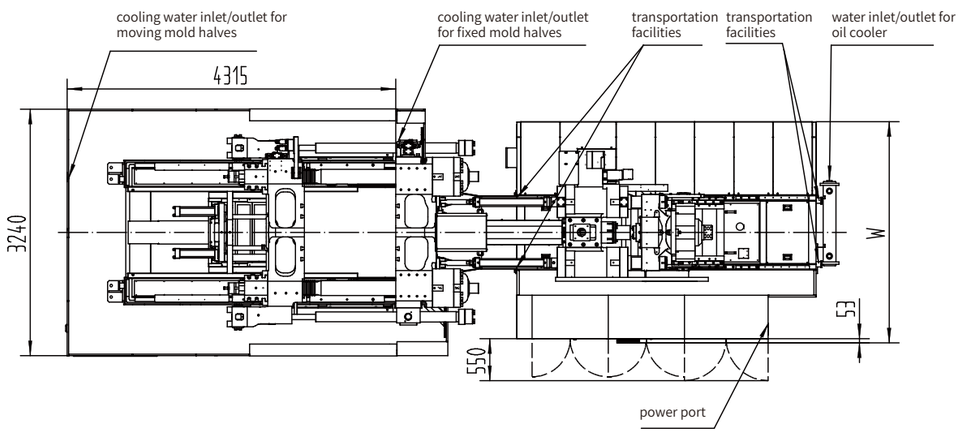

UN1100D1 Platen Dimensions

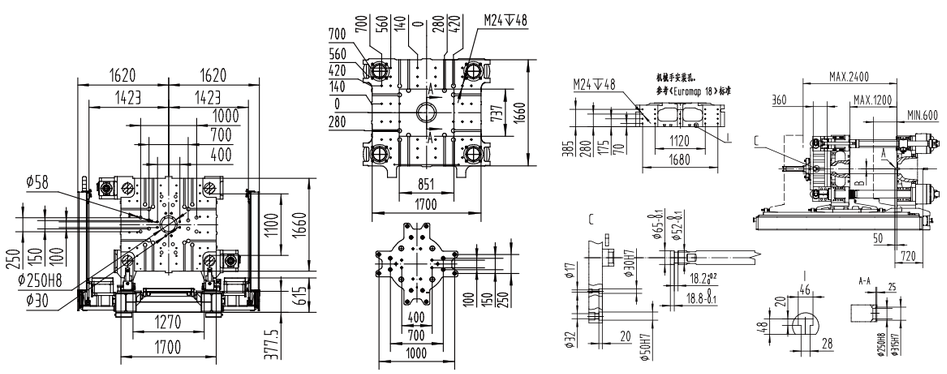

Model	A	B	L	H1	H2	W	Main power cord size	Full-load current	Bearing capacity of foundation	Mold cooling water ports	Cooling water flow (mold excluded)	Cooling water pressure	Compressed air pressure
	mm	mm	mm	mm	mm	mm	mm²	A	t/m²	n×L/min	L/min	bar	bar
UN1100D1-IU4800	SR15	Φ4.5	10004	1752	2617	2333	70	215.49	8	(8+8)×11	150	3~4	5~6
UN1100D1-IU6800	SR15	Φ4.5	10004	1752	2617	2711	95	259.84	8	(8+8)×11	150	3~4	5~6
UN1100D1-IU9000	SR15	Φ4.5	10134	2206	2863	2906	95	316.71	8	(8+8)×11	150	3~4	5~6
UN1100D1-IU10900	SR20	Φ6	10604	2125	2962	2906	120	370.88	8	(8+8)×11	150	3~4	5~6

UN1100D1 Specifications

Injection Unit																
Model	**IU4800**				**IU6800**				**IU9000**				**IU10900**			
Screw diameter (mm)	84	92	100	108	92	100	108	116	100	108	116	125	108	116	125	135
Shot volume (cm³)	2217	2659	3142	3664	3191	3770	4397	5073	4320	5038	5813	6748	5222	6024	6995	8159
Shot weight (g)	2039	2446	2890	3371	2936	3468	4045	4667	3974	4636	5348	6208	4804	5542	6435	7506
Injection pressure (MPa)	218	181	154	134	213	180	154	134	209	179	155	134	210	182	157	135
L/D ratio	21.9	20	21.6	20	21.7	22	21.5	20	21.6	20	21.6	20	22	22	21.6	20
Injection rate (cm³/s)	516	619	730	853	615	726	847	980	766	894	1031	1197	823	950	1092	1287
Max.injection speed (mm/s)	93				92.5				97.6				89			
Screw stroke (mm)	400				480				550				570			
Max.screw speed (r/min)	154				145				128				112			
Barrel heating zone (PCS)	6				7				7				8			

Clamping Unit		
	D1	**WD1**
Clamping force (kN)	11000	11000
Opening force (kN)	760	760
Platen size (mm)	1700×1660	2000×1875
Space between tie bars (mm)	1270×1100	1570×1310
Max. mold thickness (mm)	1200	1300
Min. mold thickness (mm)	600	700
Opening stroke (mm)	1800/1200	2350/1750
Max. daylight (mm)	2400	3050
Ejector force (KN)	274	274
Ejector stroke (mm)	360	360
Ejector number (PCS)	25	25

Power Unit																
System pressure (MPa)	17.5/30				17.5/30				17.5/30				17.5/30			
Pump motor (kW)	66+7.5				89+7.5				110+7.5				89+37+7.5			
Total power (kW)	110.6	110.6	120.5	120.5	143.5	143.5	153.1	153.1	169.3	169.3	178.4	178.4	199.9	199.9	204.1	204.1
Heater power (kW)	37.14	37.14	47	47	47	47	56.6	56.6	51.76	51.76	60.9	60.9	66.37	66.37	70.63	70.63

General					
Oil tank capacity (L)		1000	1150	1400	1600
Machine dimensions (m)	D1	10×3.3×3.1	10×3.3×3.1	10.1×3.3×3.1	10.6×3.3×3.1
	WD1	11×3.6×3.5	11×3.6×3.5	11.2×3.6×3.5	11.6×3.6×3.5
Max. mold weight (T)	D1	16	16	16	16
	WD1	30	30	30	30

1. Opening force refers to mold opening force generated during high-pressure mold open.
2. In the case of opening stroke, data before the slash refer to mold opening stroke with minimum mold height; data after the slash refer to opening stroke with maximum mold height.
3. Mold-bearing capacity of the movable platen is 2/3 of total mold weight.
4. The shot weight is calculated by GPPS and it is 0.92 times of the theoretical shot volume.
5. Three kinds of screws are available for each model and the medium one is standard on the machine.
6. The injection unit data are in international units and calculated as follows: theoretical shot volume [cm³] × injection pressure (MPa)/100
7. The green figures are standard specifications of clamping unit and injection unit.
8. Because of constant technical improvement, the machine specifications are subject to change without notice.

UN1200D1 Machine Dimensions

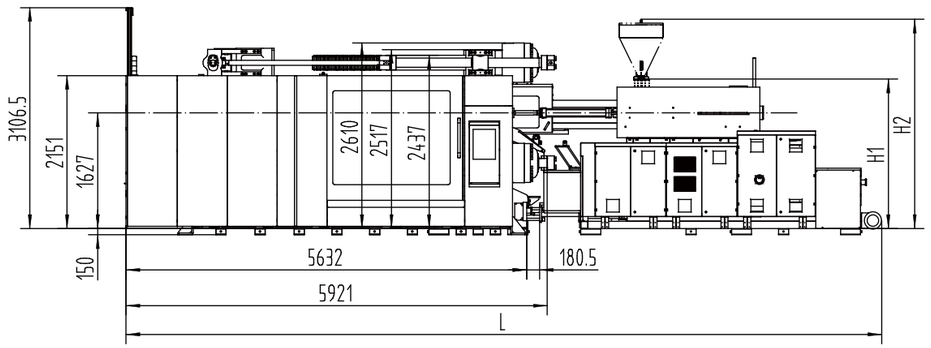

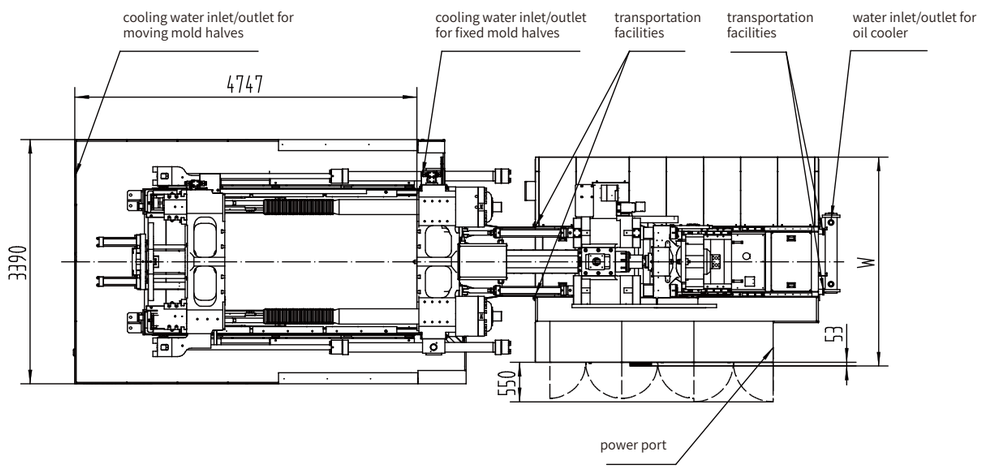

UN1200D1 Platen Dimensions

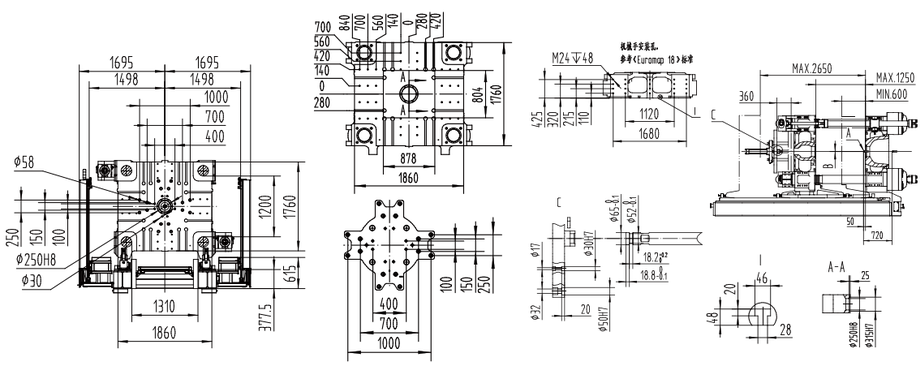

Model	A	B	L	H1	H2	W	Main power cord size	Full-load current	Bearing capacity of foundation	Mold cooling water ports	Cooling water flow (mold excluded)	Cooling water pressure	Compressed air pressure
	mm	mm	mm	mm	mm	mm	mm^2	A	t/m^2	n×L/min	L/min	bar	bar
UN1200D1-IU4800	SR15	Φ4.5	10491	1812	2677	2333	70	215.49	8	(8+8)×11	150	3~4	5~6
UN1200D1-IU6800	SR15	Φ4.5	10491	1812	2677	2711	95	259.84	8	(8+8)×11	150	3~4	5~6
UN1200D1-IU9000	SR15	Φ4.5	10621	2086	2923	2906	95	316.71	8	(8+8)×11	150	3~4	5~6
UN1200D1-IU10900	SR20	Φ6	11091	2185	3022	2906	120	370.88	8	(8+8)×11	150	3~4	5~6

UN1200D1 Specifications

Injection Unit																
Model	**IU4800**				**IU6800**				**IU9000**				**IU10900**			
Screw diameter (mm)	84	92	100	108	92	100	108	116	100	108	116	125	108	116	125	135
Shot volume (cm^3)	2217	2659	3142	3664	3191	3770	4397	5073	4320	5038	5813	6748	5222	6024	6995	8159
Shot weight (g)	2039	2446	2890	3371	2936	3468	4045	4667	3974	4636	5348	6208	4804	5542	6435	7506
Injection pressure (MPa)	218	181	154	134	213	180	154	134	209	179	155	134	210	182	157	135
L/D ratio	21.9	20	21.6	20	21.7	22	21.5	20	21.6	20	21.6	20	22	22	21.6	20
Injection rate (cm^3/s)	516	619	730	853	615	726	847	980	823	894	1031	1197	823	950	1092	1287
Max.injection speed (mm/s)	93				92.5				97.6				89			
Screw stroke (mm)	400				480				550				570			
Max.screw speed (r/min)	154				145				128				112			
Barrel heating zone (PCS)	6				7				7				8			
Clamping Unit																
Clamping force (kN)	12000															
Opening force (kN)	875															
Platen size (mm)	1860×1760															
Space between tie bars (mm)	1310×1200															
Max. mold thickness (mm)	1250															
Min. mold thickness (mm)	600															
Opening stroke (mm)	2050/1400															
Max. daylight (mm)	2650															
Ejector force (KN)	274															
Ejector stroke (mm)	360															
Ejector number (PCS)	25															
Power Unit																
System pressure (MPa)	17.5/30				17.5/30				17.5/30				17.5/30			
Pump motor (kW)	66+7.5				89+7.5				110+7.5				89+37+7.5			
Total power (kW)	110.6	110.6	120.5	120.5	143.5	143.5	153.1	153.1	169.3	169.3	178.4	178.4	199.9	199.9	204.1	204.1
Heater power (kW)	37.14	37.14	47	47	47	47	56.6	56.6	51.76	51.76	60.9	60.9	66.37	66.37	70.63	70.63
General																
Oil tank capacity (L)	1000				1150				1400				1600			
Machine dimensions (m)	10.5×3.4×3.1				10.5×3.4×3.1				10.6×3.4×3.1				11.1×3.4×3.1			
Max. mold weight (T)	20				20				20				20			

1. Opening force refers to mold opening force generated during high-pressure mold open.

2. In the case of opening stroke, data before the slash refer to mold opening stroke with minimum mold height; data after the slash refer to opening stroke with maximum mold height.

3. Mold-bearing capacity of the movable platen is 2/3 of total mold weight.

4. The shot weight is calculated by GPPS and it is 0.92 times of the theoretical shot volume.

5. Three kinds of screws are available for each model and the medium one is standard on the machine.

6. The injection unit data are in international units and calculated as follows: theoretical shot volume [cm^3] × injection pressure (MPa)/100

7. The green figures are standard specifications of clamping unit and injection unit.

8. Because of constant technical improvement, the machine specifications are subject to change without notice.

UN1300D1 Machine Dimensions

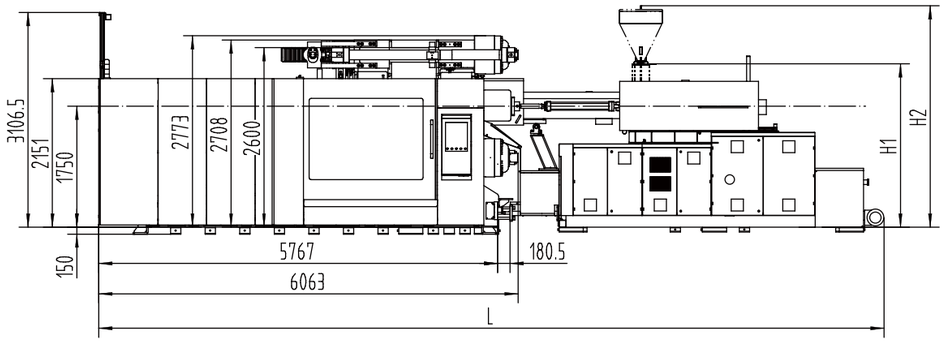

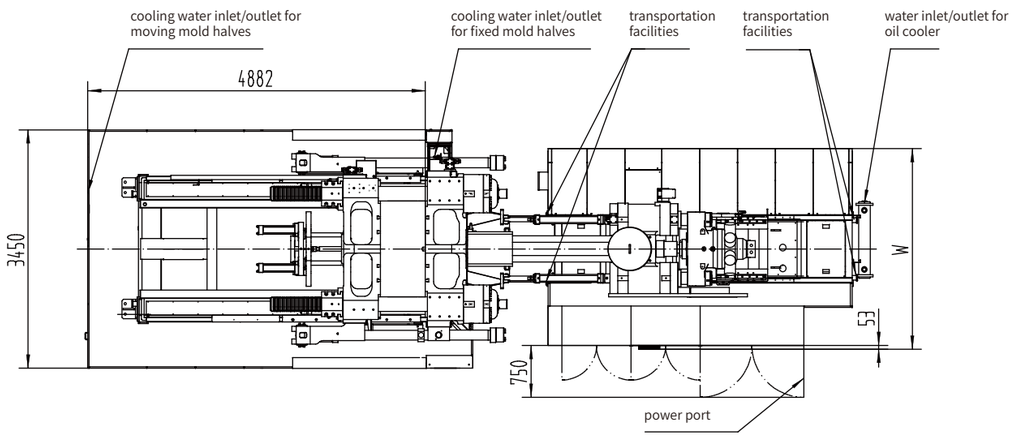

UN1300D1 Platen Dimensions

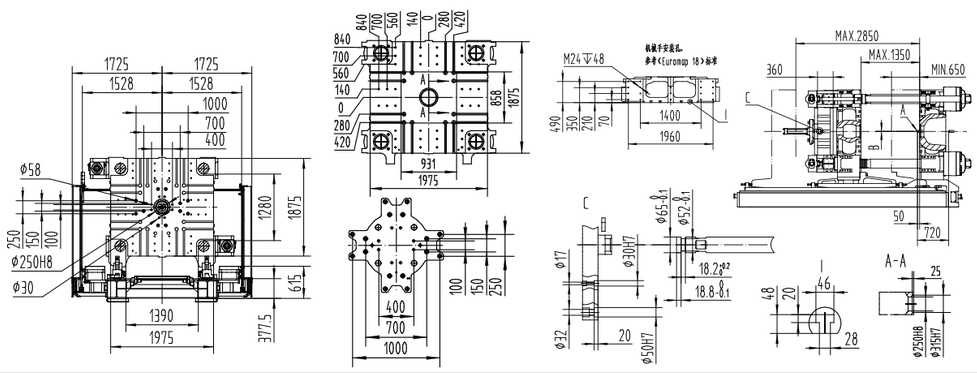

Model	A	B	L	H1	H2	W	Main power cord size	Full-load current	Bearing capacity of foundation	Mold cooling water ports	Cooling water flow (mold excluded)	Cooling water pressure	Compressed air pressure
	mm	mm	mm	mm	mm	mm	mm²	A	t/m²	n×L/min	L/min	bar	bar
UN1300D1-IU6800	SR15	Φ4.5	10756	1995	2860	2711	95	259.84	8	(8+8)×11	150	3~4	5~6
UN1300D1-IU9000	SR15	Φ4.5	10886	2269	3106	2906	95	316.71	8	(8+8)×11	150	3~4	5~6
UN1300D1-IU10900	SR20	Φ6	11356	2368	3205	2906	120	370.88	8	(8+8)×11	150	3~4	5~6
UN1300D1-IU14500	SR20	Φ8	11681	2512	3500	2906	150	470.42	8	(8+8)×11	150	3~4	5~6

UN1300D1 Specifications

Injection Unit															
Model	**IU6800**				**IU9000**				**IU10900**				**IU14500**		
Screw diameter (mm)	92	100	108	116	100	108	116	125	108	116	125	135	125	135	145
Shot volume (cm³)	3191	3770	4397	5073	4320	5038	5813	6748	5222	6024	6995	8159	7977	9304	10733
Shot weight (g)	2936	3468	4045	4667	3974	4636	5348	6208	4804	5542	6435	7506	7226	8428	9723
Injection pressure (MPa)	213	180	154	134	209	179	155	134	210	182	157	135	181	156	135
L/D ratio	21.7	22	21.5	20	21.6	20	21.6	20	22	22	21.6	20	23.6	22	20
Injection rate (cm³/s)	615	726	847	980	766	894	1031	1197	823	950	1092	1287	1316	1536	1772
Max.injection speed (mm/s)	92.5				97.6				89				107		
Screw stroke (mm)	480				550				570				650		
Max.screw speed (r/min)	145				128				112				120		
Barrel heating zone (PCS)	7				7				8				8		

Clamping Unit		
	D1	**WD1**
Clamping force (kN)	13000	13000
Opening force (kN)	875	875
Platen size (mm)	1975×1875	2275×1940
Space between tie bars (mm)	1390×1280	1670×1330
Max. mold thickness (mm)	1350	1400
Min. mold thickness (mm)	650	700
Opening stroke (mm)	2200/1500	2600/1900
Max. daylight (mm)	2850	3300
Ejector force (KN)	274	300
Ejector stroke (mm)	360	400
Ejector number (PCS)	25	25

Power Unit															
System pressure (MPa)	17.5/30				17.5/30				17.5/30				17.5/30		
Pump motor (kW)	89+7.5				110+7.5				89+37+7.5				89+66+7.5		
Total power (kW)	143.5	143.5	153.1	153.1	169.3	169.3	178.4	178.4	199.9	199.9	204.1	204.1	250.2		
Heater power (kW)	47	47	56.6	56.6	51.76	51.76	60.9	60.9	66.37	66.37	70.63	70.63	87.7		

General					
Oil tank capacity (L)		1150	1400	1600	2100
Machine dimensions (m)	D1	10.8×3.5×3.1	10.9×3.5×3.1	11.4×3.5×3.2	11.7×3.5×3.5
	WD1	11.4×3.9×3.5	11.6×3.9×3.5	12×3.9×3.5	12.4×3.9×3.5
Max. mold weight (T)	D1	23	23	23	23
	WD1	32	32	32	32

1. Opening force refers to mold opening force generated during high-pressure mold open.
2. In the case of opening stroke, data before the slash refer to mold opening stroke with minimum mold height; data after the slash refer to opening stroke with maximum mold height.
3. Mold-bearing capacity of the movable platen is 2/3 of total mold weight.
4. The shot weight is calculated by GPPS and it is 0.92 times of the theoretical shot volume.
5. Three kinds of screws are available for each model and the medium one is standard on the machine.
6. The injection unit data are in international units and calculated as follows: theoretical shot volume [cm³] × injection pressure (MPa)/100
7. The green figures are standard specifications of clamping unit and injection unit.
8. Because of constant technical improvement, the machine specifications are subject to change without notice.

UN1400D1 Machine Dimensions

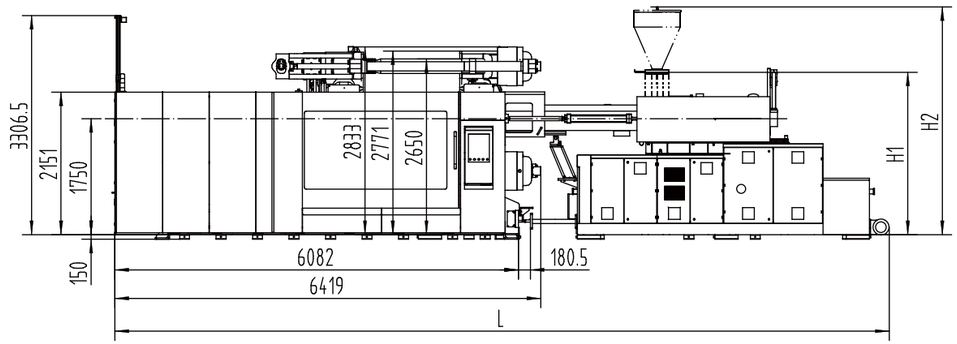

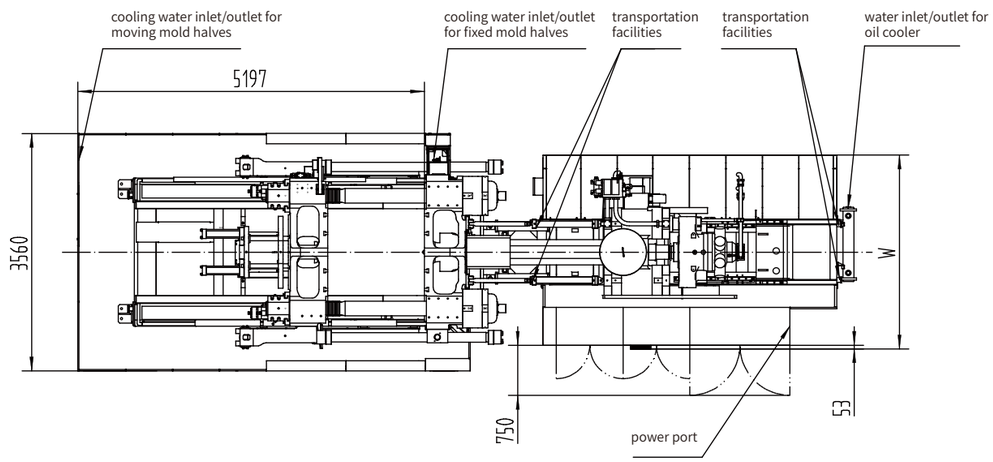

UN1400D1 Platen Dimensions

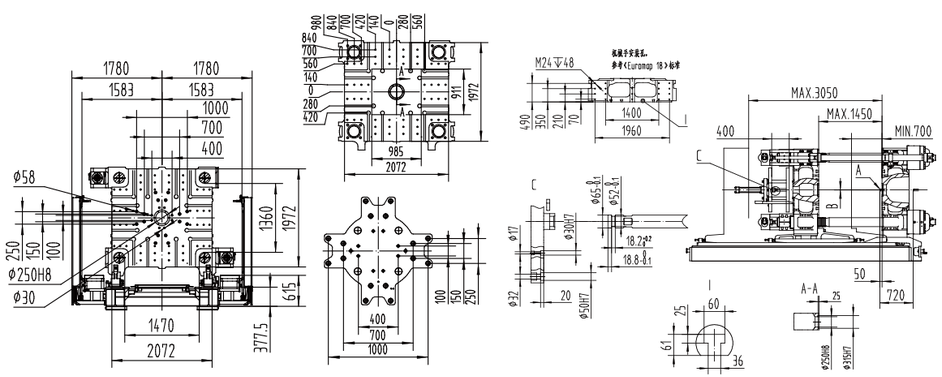

Model	A	B	L	H1	H2	W	Main power cord size	Full-load current	Bearing capacity of foundation	Mold cooling water ports	Cooling water flow (mold excluded)	Cooling water pressure	Compressed air pressure
	mm	mm	mm	mm	mm	mm	mm²	A	t/m²	n×L/min	L/min	bar	bar
UN1400D1-IU6800	SR15	Φ4.5	11072	1995	2860	2711	95	259.84	8	(8+8)×11	150	3~4	5~6
UN1400D1-IU9000	SR15	Φ4.5	11202	2269	3106	2906	95	316.71	8	(8+8)×11	150	3~4	5~6
UN1400D1-IU10900	SR20	Φ6	11672	2368	3205	2906	120	370.88	8	(8+8)×11	150	3~4	5~6
UN1400D1-IU14500	SR20	Φ8	11997	2512	3500	3146	150	470.42	8	(8+8)×11	150	3~4	5~6

UN1400D1 Specifications

Injection Unit															
Model	**IU6800**				**IU9000**				**IU10900**				**IU14500**		
Screw diameter (mm)	92	100	108	116	100	108	116	125	108	116	125	135	125	135	145
Shot volume (cm³)	3191	3770	4397	5073	4320	5038	5813	6748	5222	6024	6995	8159	7977	9304	10733
Shot weight (g)	2936	3468	4045	4667	3974	4636	5348	6208	4804	5542	6435	7506	7339	8560	9875
Injection pressure (MPa)	213	180	154	134	209	179	155	134	210	182	157	135	181	156	135
L/D ratio	21.7	22	21.5	20	21.6	20	21.6	20	22	22	21.6	20	23.6	22	20
Injection rate (cm³/s)	615	726	847	980	766	894	1031	1197	823	950	1092	1287	1316	1536	1772
Max.injection speed (mm/s)	92.5				97.6				89				107		
Screw stroke (mm)	480				550				570				650		
Max.screw speed (r/min)	145				128				112				120		
Barrel heating zone (PCS)	7				7				8				8		
Clamping Unit															
Clamping force (kN)	14000														
Opening force (kN)	950														
Platen size (mm)	2072×1972														
Space between tie bars (mm)	1470×1360														
Max. mold thickness (mm)	1450														
Min. mold thickness (mm)	700														
Opening stroke (mm)	2350/1600														
Max. daylight (mm)	3050														
Ejector force (KN)	300														
Ejector stroke (mm)	400														
Ejector number (PCS)	25														
Power Unit															
System pressure (MPa)	17.5/30				17.5/30				17.5/30				17.5/30		
Pump motor (kW)	89+7.5				110+7.5				89+37+7.5				89+66+7.5		
Total power (kW)	143.5	143.5	153.1	153.1	169.3	169.3	178.4	178.4	199.9	199.9	204.1	204.1	250.2		
Heater power (kW)	47	47	56.6	56.6	51.76	51.76	60.9	60.9	66.37	66.37	70.63	70.63	87.7		
General															
Oil tank capacity (L)	1150				1400				1600				2100		
Machine dimensions (m)	11.1×3.6×3.3				11.2×3.6×3.3				11.7×3.6×3.3				12×3.6×3.5		
Max. mold weight (T)	27				27				27				27		

1. Opening force refers to mold opening force generated during high-pressure mold open.

2. In the case of opening stroke, data before the slash refer to mold opening stroke with minimum mold height; data after the slash refer to opening stroke with maximum mold height.

3. Mold-bearing capacity of the movable platen is 2/3 of total mold weight.

4. The shot weight is calculated by GPPS and it is 0.92 times of the theoretical shot volume.

5. Three kinds of screws are available for each model and the medium one is standard on the machine.

6. The injection unit data are in international units and calculated as follows: theoretical shot volume [cm³] × injection pressure (MPa)/100

7. The green figures are standard specifications of clamping unit and injection unit.

8. Because of constant technical improvement, the machine specifications are subject to change without notice.

UN1600D1 Machine Dimensions

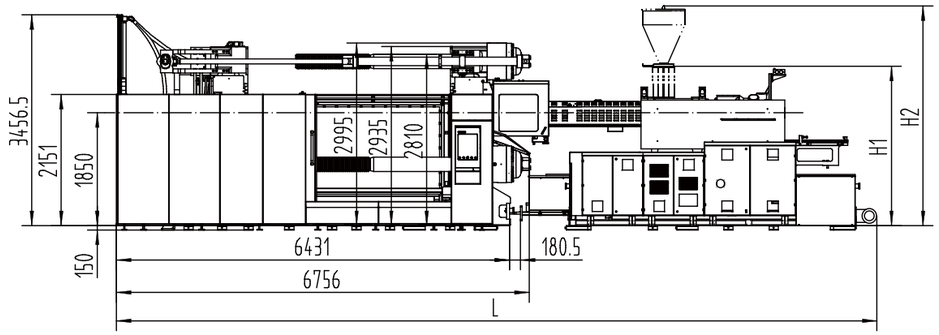

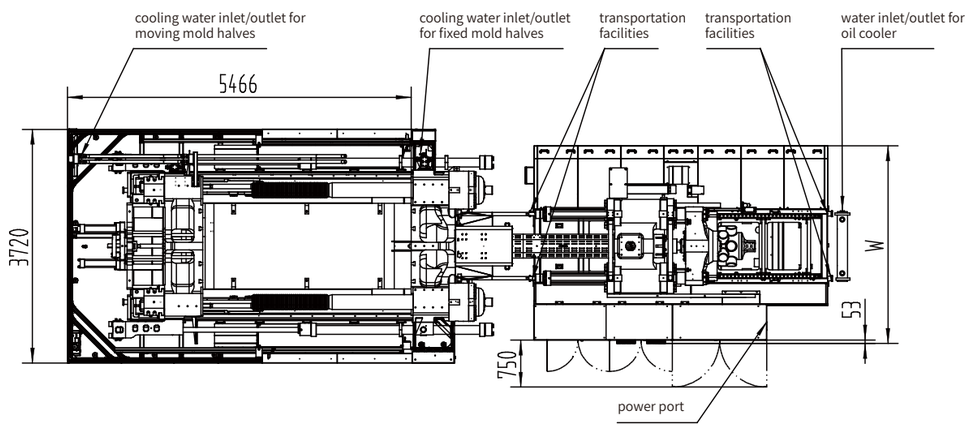

UN1600D1 Platen Dimensions

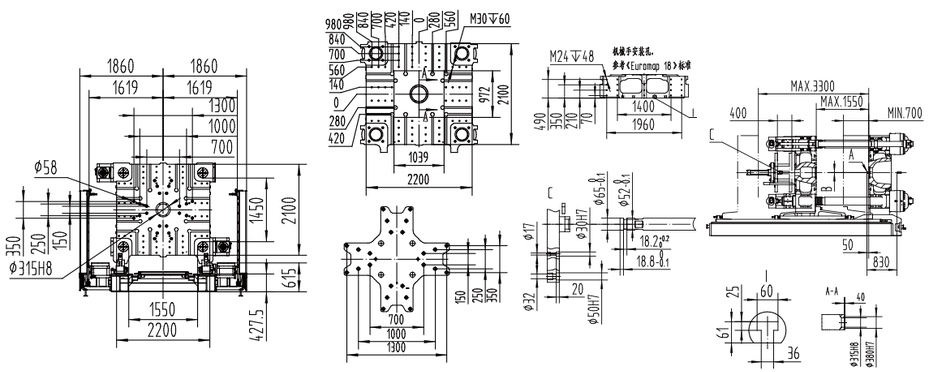

Model	A	B	L	H1	H2	W	Main power cord size	Full-load current	Bearing capacity of foundation	VMold cooling water ports	Cooling water flow (mold excluded)	Cooling water pressure	Compressed air pressure
	mm	mm	mm	mm	mm	mm	mm²	A	t/m²	n×L/min	L/min	bar	bar
UN1600D1-IU9000	SR15	Φ4.5	11651	2369	3206	2906	95	316.71	10.5	(8+8)×11	200	3~4	5~6
UN1600D1-IU10900	SR20	Φ6	12121	2468	3305	2906	120	370.88	10.5	(8+8)×11	200	3~4	5~6
UN1600D1-IU14500	SR20	Φ8	12446	2612	3600	3146	150	470.42	10.5	(8+8)×11	200	3~4	5~6
UN1600D1-IU18500	SR20	Φ8	12446	2628	3616	3146	150	470.42	10.5	(8+8)×11	200	3~4	5~6

UN1600D1 Specifications

Injection Unit															
Model	**IU9000**				**IU10900**				**IU14500**			**IU18500**			
Screw diameter (mm)	100	108	116	125	108	116	125	135	125	135	145	135	145	155	165
Shot volume (cm³)	4320	5038	5813	6748	5222	6024	6995	8159	7977	9304	10733	10020	11559	13208	14968
Shot weight (g)	3974	4636	5348	6208	4804	5542	6435	7506	7339	8560	9875	9218	10634	12152	13770
Injection pressure (MPa)	209	179	155	134	210	182	157	135	181	156	135	184	160	140	123
L/D ratio	21.6	20	21.6	20	22	22	21.6	20	23.6	22	20	23.6	22	21	20
Injection rate (cm³/s)	766	894	1031	1197	823	950	1092	1287	1316	1536	1772	1295	1494	1717	1936
Max.injection speed (mm/s)	97.6				89				107			91			
Screw stroke (mm)	550				570				650			700			
Max.screw speed (r/min)	128				112				120			120			
Barrel heating zone (PCS)	7				8				8			8			

Clamping Unit		
	D1	**WD1**
Clamping force (kN)	16000	16000
Opening force (kN)	1100	1100
Platen size (mm)	2200×2100	2480×2140
Space between tie bars (mm)	1550×1450	1890×1440
Max. mold thickness (mm)	1550	1500
Min. mold thickness (mm)	700	750
Opening stroke (mm)	2600/1750	2600/1850
Max. daylight (mm)	3300	3350
Ejector force (KN)	300	460
Ejector stroke (mm)	400	430
Ejector number (PCS)	25	25

Power Unit											
System pressure (MPa)	17.5/30				17.5/30				17.5/30		17.5/30
Pump motor (kW)	110+11				89+37+11				89+66+11		89+66+11
Total power (kW)	172.8	172.8	181.9	181.9	203.4	203.4	207.6	207.6	253.7		263.8
Heater power (kW)	51.76	51.76	60.9	60.9	66.37	66.37	70.63	70.63	87.7		97.8

General					
Oil tank capacity (L)		1400	1600	2100	2100
Machine dimensions (m)	D1	11.7×3.7×3.5	12.1×3.7×3.5	12.5×3.7×3.6	12.5×3.7×3.6
	WD1	12.1×4.2×3.6	12.4×4.2×3.6	12.8×4.2×3.6	12.8×4.2×3.6
Max. mold weight (T)	D1	34	34	34	34
	WD1	45	45	45	45

1. Opening force refers to mold opening force generated during high-pressure mold open.
2. In the case of opening stroke, data before the slash refer to mold opening stroke with minimum mold height; data after the slash refer to opening stroke with maximum mold height.
3. Mold-bearing capacity of the movable platen is 2/3 of total mold weight.
4. The shot weight is calculated by GPPS and it is 0.92 times of the theoretical shot volume.
5. Three kinds of screws are available for each model and the medium one is standard on the machine.
6. The injection unit data are in international units and calculated as follows: theoretical shot volume [cm³] × injection pressure (MPa)/100
7. The green figures are standard specifications of clamping unit and injection unit.
8. Because of constant technical improvement, the machine specifications are subject to change without notice.

UN1850D1 Machine Dimensions

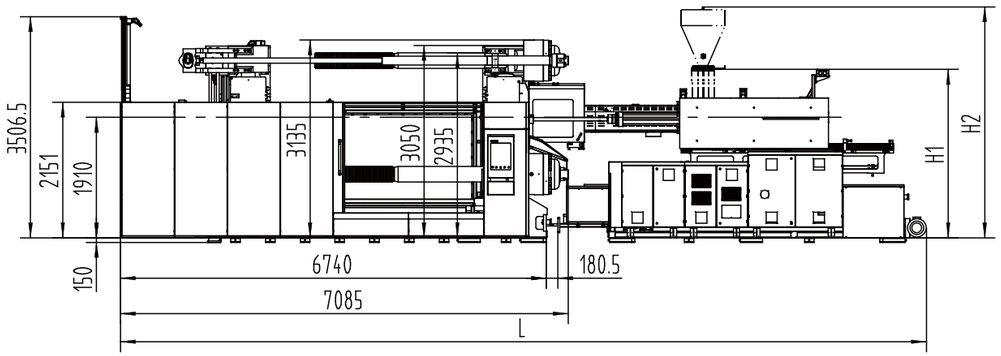

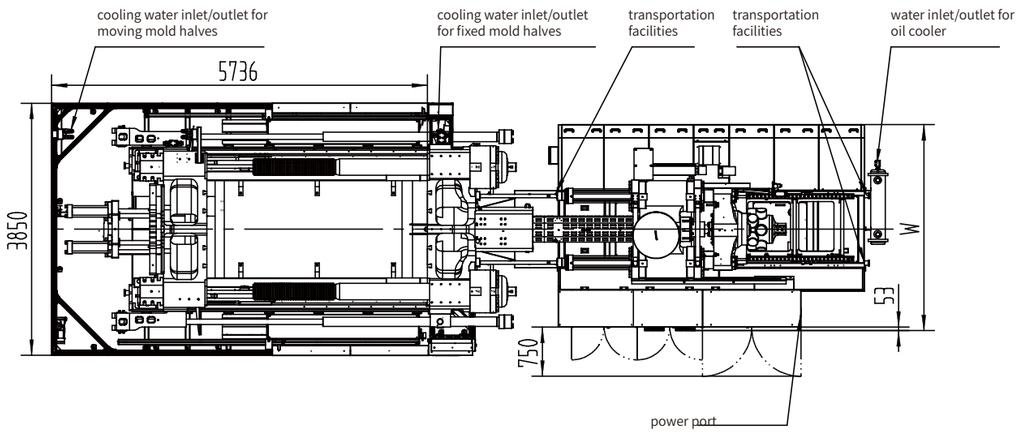

UN1850D1 Platen Dimensions

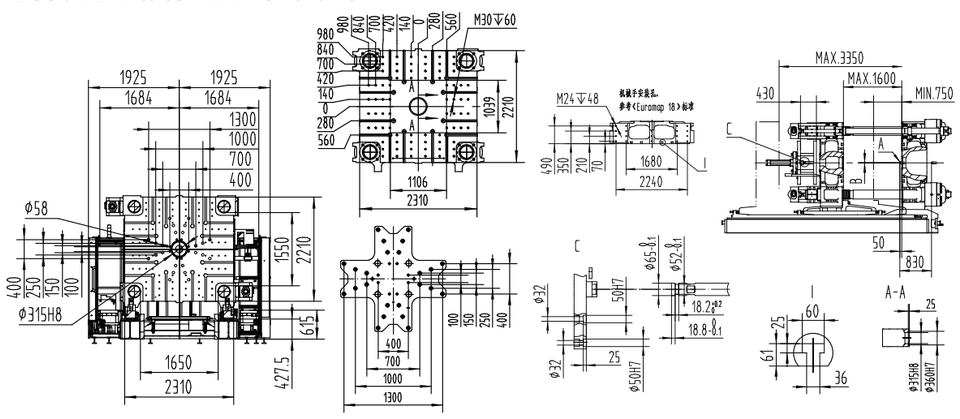

Model	A	B	L	H1	H2	W	Main power cord size	Full-load current	Bearing capacity of foundation	Mold cooling water ports	Cooling water flow (mold excluded)	Cooling water pressure	Compressed air pressure
	mm	mm	mm	mm	mm	mm	mm²	A	t/m²	n×L/min	L/min	bar	bar
UN1850D1-IU9000	SR15	Φ4.5	11960	2429	3266	2906	95	316.71	10.5	(8+8)×11	200	3~4	5~6
UN1850D1-IU10900	SR20	Φ6	12430	2528	3365	2906	120	370.88	10.5	(8+8)×11	200	3~4	5~6
UN1850D1-IU14500	SR20	Φ8	12756	2672	3660	3146	150	470.42	10.5	(8+8)×11	200	3~4	5~6
UN1850D1-IU18500	SR20	Φ8	12756	2688	3676	3146	150	470.42	10.5	(8+8)×11	200	3~4	5~6

UN1850D1 Specifications

Injection Unit															
Model	**IU9000**				**IU10900**				**IU14500**			**IU18500**			
Screw diameter (mm)	100	108	116	125	108	116	125	135	125	135	145	135	145	155	165
Shot volume (cm³)	4320	5038	5813	6748	5222	6024	6995	8159	7977	9304	10733	10020	11559	13208	14968
Shot weight (g)	3974	4636	5348	6208	4804	5542	6435	7506	7339	8560	9875	9218	10634	12152	13770
Injection pressure (MPa)	209	179	155	134	210	182	157	135	181	156	135	184	160	140	123
L/D ratio	21.6	20	21.6	20	22	22	21.6	20	23.6	22	20	23.6	22	21	20
Injection rate (cm³/s)	766	894	1031	1197	823	950	1092	1287	1316	1536	1772	1295	1494	1717	1936
Max.injection speed (mm/s)	97.6				89				107			91			
Screw stroke (mm)	550				570				650			700			
Max.screw speed (r/min)	128				112				120			120			
Barrel heating zone (PCS)	7				8				8			8			

Clamping Unit		
	D1	**WD1**
Clamping force (kN)	18500	18500
Opening force (kN)	1230	1230
Platen size (mm)	2310×2210	2682×2452
Space between tie bars (mm)	1650×1550	2080×1680
Max. mold thickness (mm)	1600	1600
Min. mold thickness (mm)	750	800
Opening stroke (mm)	2600/1750	3000/2200
Max. daylight (mm)	3350	3800
Ejector force (KN)	460	460
Ejector stroke (mm)	430	430
Ejector number (PCS)	25	25

Power Unit											
System pressure (MPa)	17.5/30				17.5/30				17.5/30		17.5/30
Pump motor (kW)	110+11				89+37+11				89+66+11		89+66+11
Total power (kW)	172.8	172.8	181.9	181.9	203.4	203.4	207.6	207.6	253.7		264.9
Heater power (kW)	51.76	51.76	60.9	60.9	66.37	66.37	70.63	70.63	87.7		98.9

General					
Oil tank capacity (L)		1400	1600	2100	2100
Machine dimensions (m)	D1	12×3.9×3.5	12.4×3.9×3.5	12.8×3.9×3.7	12.8×3.9×3.7
	WD1	12.1×4.2×3.6	12.4×4.2×3.6	12.8×4.2×3.6	12.8×4.2×3.6
Max. mold weight (T)	D1	42	42	42	42
	WD1	62	62	62	62

1. Opening force refers to mold opening force generated during high-pressure mold open.
2. In the case of opening stroke, data before the slash refer to mold opening stroke with minimum mold height; data after the slash refer to opening stroke with maximum mold height.
3. Mold-bearing capacity of the movable platen is 2/3 of total mold weight.
4. The shot weight is calculated by GPPS and it is 0.92 times of the theoretical shot volume.
5. Three kinds of screws are available for each model and the medium one is standard on the machine.
6. The injection unit data are in international units and calculated as follows: theoretical shot volume [cm³] × injection pressure (MPa)/100
7. The green figures are standard specifications of clamping unit and injection unit.
8. Because of constant technical improvement, the machine specifications are subject to change without notice.

UN2100D1 Machine Dimensions

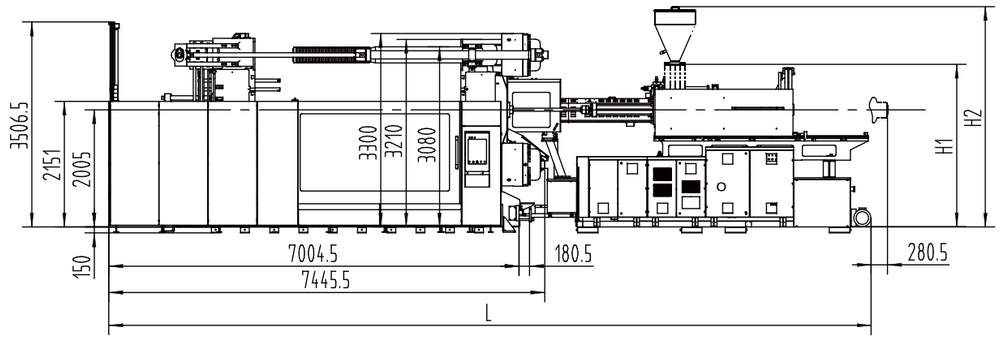

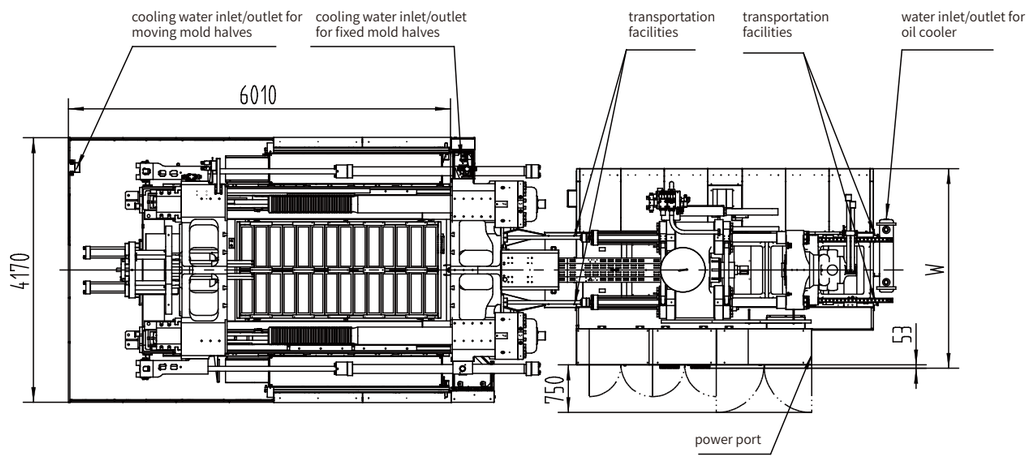

UN2100D1 Platen Dimensions

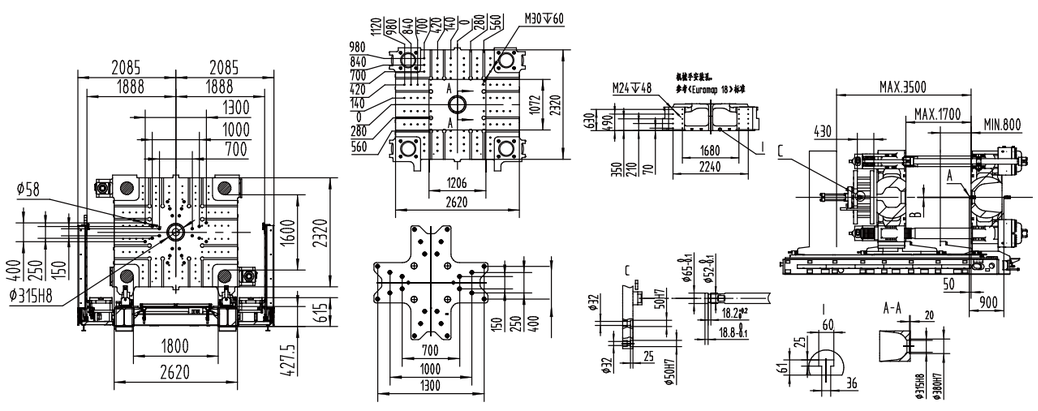

Model	A	B	L	H1	H2	W	Main power cord size	Full-load current	Bearing capacity of foundation	Mold cooling water ports	Cooling water flow (mold excluded)	Cooling water pressure	Compressed air pressure
	mm	mm	mm	mm	mm	mm	mm²	A	t/m²	n×L/min	L/min	bar	bar
UN2100D1-IU10900	SR20	Φ6	12695	2623	3460	2906	120	370.88	12.5	(8+8)×11	200	3~4	5~6
UN2100D1-IU14500	SR20	Φ8	13021	2767	3755	3146	150	470.42	12.5	(8+8)×11	200	3~4	5~6
UN2100D1-IU18500	SR20	Φ8	13021	2783	3771	3146	150	470.42	12.5	(8+8)×11	200	3~4	5~6
UN2100D1-IU23750	SR25	Φ8	15475	2789	3795	3660	185	590.28	12.5	(8+8)×11	200	3~4	5~6
UN2100D1-IU37500	SR25	Φ8	15475	2825	3831	3660	185	643.48	12.5	(8+8)×11	200	3~4	5~6

UN2100D1 Specifications

Injection Unit															
Model	**IU10900**				**IU14500**			**IU18500**				**IU23750**			**IU37500**
Screw diameter (mm)	108	116	125	135	125	135	145	135	145	155	165	145	155	165	185
Shot volume (cm³)	5222	6024	6995	8159	7977	9304	10733	10020	11559	13208	14968	12385	14152	16037	26343
Shot weight (g)	4804	5542	6435	7506	7339	8560	9875	9218	10634	12152	13770	11394	13020	14754	24235
Injection pressure (MPa)	210	182	157	135	181	156	135	184	160	140	123	190	167	147	151
L/D ratio	22	22	21.6	20	23.6	22	20	23.6	22	21	20	23.5	22	20.1	22
Injection rate (cm³/s)	823	950	1092	1287	1316	1536	1772	1295	1494	1717	1936	1532	1750	1983	1934
Max.injection speed (mm/s)	89				107			91				92.7			71.9
Screw stroke (mm)	570				650			700				750			980
Max.screw speed (r/min)	112				120			120				120			80
Barrel heating zone (PCS)	8				8			8				10			11
Clamping Unit															
Clamping force (kN)	21000														
Opening force (kN)	1380														
Platen size (mm)	2620x2320														
Space between tie bars (mm)	1800x1600														
Max. mold thickness (mm)	1700														
Min. mold thickness (mm)	800														
Opening stroke (mm)	2700/1800														
Max. daylight (mm)	3500														
Ejector force (KN)	460														
Ejector stroke (mm)	430														
Ejector number (PCS)	25														
Power Unit															
System pressure (MPa)	17.5/30				17.5/30			17.5/30				17.5/30			17.5/30
Pump motor (kW)	89+37+11				89+66+11			89+66+11				110+89+11			110+89+11
Total power (kW)	203.4	203.4	207.6	207.6	253.7			263.8				322.4			357.5
Heater power (kW)	66.37	66.37	70.63	70.63	87.7			97.8				112.4			147.5
General															
Oil tank capacity (L)	1600				2100			2100				2850			2850
Machine dimensions (m)	12.7×4.2×3.5				13.0×4.2×3.8			13.0×4..2×3.8				15.5×4.2×3.9			15.5×4.2×3.9
Max. mold weight (T)	50				50			50				50			50

1. Opening force refers to mold opening force generated during high-pressure mold open.

2. In the case of opening stroke, data before the slash refer to mold opening stroke with minimum mold height; data after the slash refer to opening stroke with maximum mold height.

3. Mold-bearing capacity of the movable platen is 2/3 of total mold weight.

4. The shot weight is calculated by GPPS and it is 0.92 times of the theoretical shot volume.

5. Three kinds of screws are available for each model and the medium one is standard on the machine.

6. The injection unit data are in international units and calculated as follows: theoretical shot volume [cm³] × injection pressure (MPa)/100

7. The green figures are standard specifications of clamping unit and injection unit.

8. Because of constant technical improvement, the machine specifications are subject to change without notice.

UN2400D1 Machine Dimensions

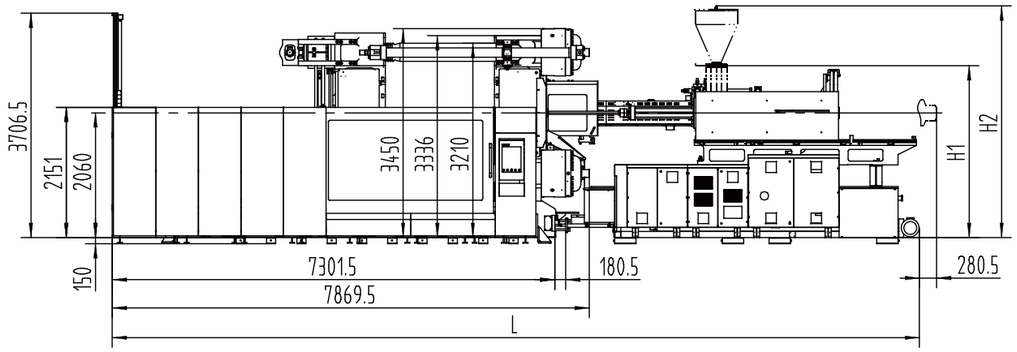

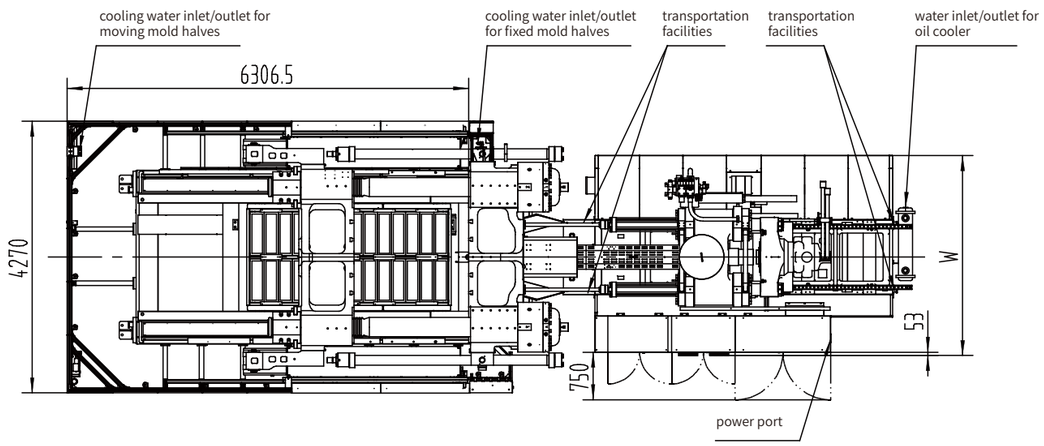

UN2400D1 Platen Dimensions

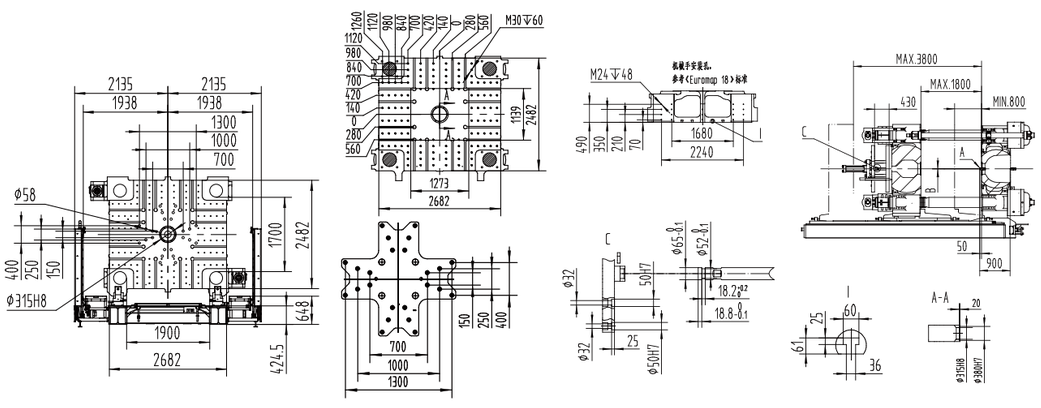

Model	A	B	L	H1	H2	W	Main power cord size	Full-load current	Bearing capacity of foundation	Mold cooling water ports	Cooling water flow (mold excluded)	Cooling water pressure	Compressed air pressure
	mm	mm	mm	mm	mm	mm	mm²	A	t/m²	n×L/min	L/min	bar	bar
UN2400D1-IU14500	SR20	Φ8	13318	2822	3810	3146	150	470.42	12.5	(8+8)×11	200	3~4	5~6
UN2400D1-IU18500	SR20	Φ8	13318	2838	3826	3146	150	470.42	12.5	(8+8)×11	200	3~4	5~6
UN2400D1-IU23750	SR25	Φ8	15772	2844	3850	3660	185	590.28	12.5	(8+8)×11	200	3~4	5~6
UN2400D1-IU37500	SR25	Φ8	15772	2880	3886	3660	185	643.48	12.5	(8+8)×11	200	3~4	5~6
UN2400D1-IU50000	SR28	Φ12	15772	2915	3921	3660	185	713.26	12.5	(8+8)×11	200	3~3	5~6

UN2400D1 Specifications

Injection Unit												
Model	**IU14500**			**IU18500**				**IU23750**			**IU37500**	**IU50000**
Screw diameter (mm)	125	135	145	135	145	155	165	145	155	165	185	200
Shot volume (cm³)	7977	9304	10733	10020	11559	13208	14968	12385	14152	16037	26343	35186
Shot weight (g)	7339	8560	9875	9218	10634	12152	13770	11394	13020	14754	24235	32371
Injection pressure (MPa)	181	156	135	184	160	140	123	190	167	147	151	158
L/D ratio	23.6	22	20	23.6	22	21	20	23.5	22	20.1	22	22
Injection rate (cm³/s)	1316	1536	1772	1295	1494	1717	1936	1532	1750	1983	1934	1843
Max.injection speed (mm/s)	107			91				92.7			71.9	58.7
Screw stroke (mm)	650			700				750			980	1120
Max.screw speed (r/min)	120			120				120			80	67
Barrel heating zone (PCS)	8			8				10			11	9
Clamping Unit												
Clamping force (kN)	24000											
Opening force (kN)	1640											
Platen size (mm)	2682X2482											
Space between tie bars (mm)	1900X1700											
Max. mold thickness (mm)	1800											
Min. mold thickness (mm)	800											
Opening stroke (mm)	3000/2000											
Max. daylight (mm)	3800											
Ejector force (KN)	460											
Ejector stroke (mm)	430											
Ejector number (PCS)	25											
Power Unit												
System pressure (MPa)	17.5/30			17.5/30				17.5/30			17.5/30	17.5/30
Pump motor (kW)	89+66+11			89+66+11				110+89+11			110+89+11	110+89+11
Total power (kW)	253.7			263.8				322.4			357.5	403
Heater power (kW)	87.7			97.8				112.4			147.5	193
General												
Oil tank capacity (L)	2100			2100				2850			2850	2850
Machine dimensions (m)	13.3×4.3×3.8			13.3×4.3×3.8				15.8×4.3×3.9			15.8×4.3×3.9	15.8×4.3×4.0
Max. mold weight (T)	59			59				59			59	59

1. Opening force refers to mold opening force generated during high-pressure mold open.

2. In the case of opening stroke, data before the slash refer to mold opening stroke with minimum mold height; data after the slash refer to opening stroke with maximum mold height.

3. Mold-bearing capacity of the movable platen is 2/3 of total mold weight.

4. The shot weight is calculated by GPPS and it is 0.92 times of the theoretical shot volume.

5. Three kinds of screws are available for each model and the medium one is standard on the machine.

6. The injection unit data are in international units and calculated as follows: theoretical shot volume [cm³] × injection pressure (MPa)/100

7. The green figures are standard specifications of clamping unit and injection unit.

8. Because of constant technical improvement, the machine specifications are subject to change without notice.

Main Part List

(Standard) Part Name	Brand/Specifications	Place of Brand
Control system	KEBA	Austria
Oil seal	SKF	Sweden
Guide ring	SKF	Sweden
Directional valve	Rexroth/ YUKEN/Atos	Germany/Japan/Italy
Proportional relief valve	YUKEN/ Hydraulik Power	Japan/Taiwan
High-response proportional valve	Rexroth	Germany
Shaft seal cartridge valve	Rexroth	Germany
Cartridge type electromagnetic ball valve	HYDAC	Germany
Variable piston pump	Rexroth	Germany
Pressure sensor	Danfoss	Denmark
Magnetostrictive displacement sensor	Germanjet	Germany
Gear pump	SUMITOMO/ Eckerle	Japan/Germany
Servo motor	PHASE	Italy
Barrel assembly	HAYEUR	CHINA
Hydraulic motor	PKL/DANDUN/POCLAIN	CHINA/CHINA/France
Tie bar	Hua Xiang	CHINA
Tie bar locking nut	Hua Xiang	CHINA
Clamping piston	Hua Xiang	CHINA
Clamping cylinder cover	YGG/ QSQY	TAIWAN,CHINA / CHINA
Platen	YGG/ QSQY	TAIWAN,CHINA / CHINA
Servo drive	PHASE	Italy
Solid state relay	KUDOM	UK
Automatic switch	ABB	Switzerland
Air switch	FUJI	Japan
Position limit switch	SCHMERSAL/ Schneider/ Panasonic	Germany/France/Japan
Proximity switch	AUTONICS	Korea
AC contractor	FUJI	Japan

Standard and Optional Features

● Standard
○ Optional

● Clamping unit		
Clamping mechanism with tie bars independent of moving platen	●	
Quantitative volumetric automatic lubrication system	●	
High-response proportional control of pressure and flow for mold open & mold close	●	
Hydraulically-driven ejection device	●	
Low-pressure mold protection	●	
Clamping force adjustment as needed	●	
Forced reset function	●	
Ejector return protection	●	
Robot mounting hole (Euromap 18)	●	
Electric door (optional for 500-700D1)	●	
T-slot platen	●	
Four clamp platens made of high-rigidity ductile iron	●	
Hydraulic and electrical safety devices	●	
Safety foot plate in mold area (unavailable for 500-900D1)	●	
High-accuracy magnetostrictive displacement sensor for mold open/close	●	
Safety foot plate in front & rear door areas		○
Synchronous ejection and core pulling		○
Secondary mold closing		○
Quick mold change system platform		○
Hydraulic mold clamp		○
Magnetic platen		○
Increased mold thickness		○
Increased ejector stroke		○
Mold lifting device		○
Heat insulating plate of mold		○
Special mold mounting hole		○
Increased mold opening stroke		○
Larger ejector force		○
● Electrical control system		
Closed-loop PID barrel temperature control	●	
Manual, semi-auto and fully-auto operating mode	●	
Input and output inspection interface	●	
Automatic display of alarm messages and acousto-optic alarm system	●	
Built-in software with the oscilloscope function	●	
Unlimited technical parameter storage	●	
Automatic mold height adjustment	●	
Chinese and English operating system	●	
Safety gate emergency stop function	●	
Online cycle monitoring	●	
12’’ TFT color touch screen	●	
Visualized graphic programming	●	
PDP interface	●	
Injection monitoring protection	●	
Mold-close monitoring protection	●	
Statistical process control (SPC) interface	●	
Electrical enclosure rated IP54	●	
Screw speed detecting device	●	
Time/ position/ time + position control modes for switchover to holding phase	●	
Protective plate in mold area	●	
3 sets of 380V 32A socket (2 sets for 500-900D1)	●	
A sets of 380V 16A socket (2 sets for 500-900D1)	●	
16-level password security	●	
Reserved robot interfaces based on SPI, EUROMAP 12	●	
Automatic heat preserving, automatic heating settings	●	
Servo injection		○
Electric unscrewing device		○
Hot runner interface		○
Auxiliary emergency stop button		○
Air blast in mold		○
Power supply change		○

Central (networked) monitoring system		○
Protective light grid of safety gates		○
Opto-electronic safety switch of front and rear safety gates		○
Protective light grid of central safety foot plate		○
● Injection unit		
Double parallel cylinder injection unit with low-speed high-torque hydraulic motor	●	
Nitrided alloy steel screw & barrel	●	
Heat preservation cover for barrel and purge guard (with electrical protection)	●	
Selectable suck-back before or after plasticizing	●	
10-stage injection speed/ pressure/ position control	●	
10-stage holding speed/ pressure/ position/ time control	●	
5-stage plasticizing speed/ pressure/ position control	●	
Linear guides for injection unit	●	
Double-carriage cylinder	●	
Cold start protection	●	
Manual central lubrication system of injection unit	●	
Suck back function	●	
Automatic purging	●	
Screw rotation measuring device	●	
Injection carriage transducer (unavailable for 500-1600D1)		○
Mixing screw		○
Bi-metallic screw barrel		○
Swivelling injection unit		○
Extended nozzle (50/100/150/200mm longer)		○
Special screw components		○
Energy-saving barrel heat retaining device (silicone cover)		○
Spring shut-off nozzle		○
Increased injection stroke		○
● Hydraulic system		
Low-noise energy-saving hydraulic circuit	●	
Proportional back pressure control for plasticizing	●	
Oil pre-heating system	●	
2 sets of core puller (4 sets for UN2100D1 and larger models)	●	
Differential mold-open circuit	●	
Injection and mold-close pressure protection	●	
High-pressure mold opening	●	
Automatic pressure and flow calibration	●	
Oil temperature and oil level alarm	●	
High-performance servo pump system	●	
Multiple sets of sequence (injection) valve interface		○
Variable displacement pump system		○
Closed-loop proportional variable displacement pump system		○
High-response accumulating servo injection system		○
Enlarged oil cooler		○
Multi-capacity larger pump motor		○
Multi-capacity larger plasticizing motor		○
Servo injection (closed-loop control of injection, plasticizing, holding pressure and back pressure)		○
Plasticizing during mold opening		○
Multiple sets of core pull or unscrewing devices with electrical interfaces		○
● Other		
User manual	●	
Adjustable leveling pad	●	
8-in 8-out water manifold on movable platen (with general, quick connectors)	●	
Nozzle spanner	●	
Mold clamp	●	
Hopper (standard on 500-900D1)		○
Hydraulic oil (standard on 500-1400D1)		○
Loading platform		○
Mold temperature controller		○
Automatic loader		○
Dehumidification dryer		○